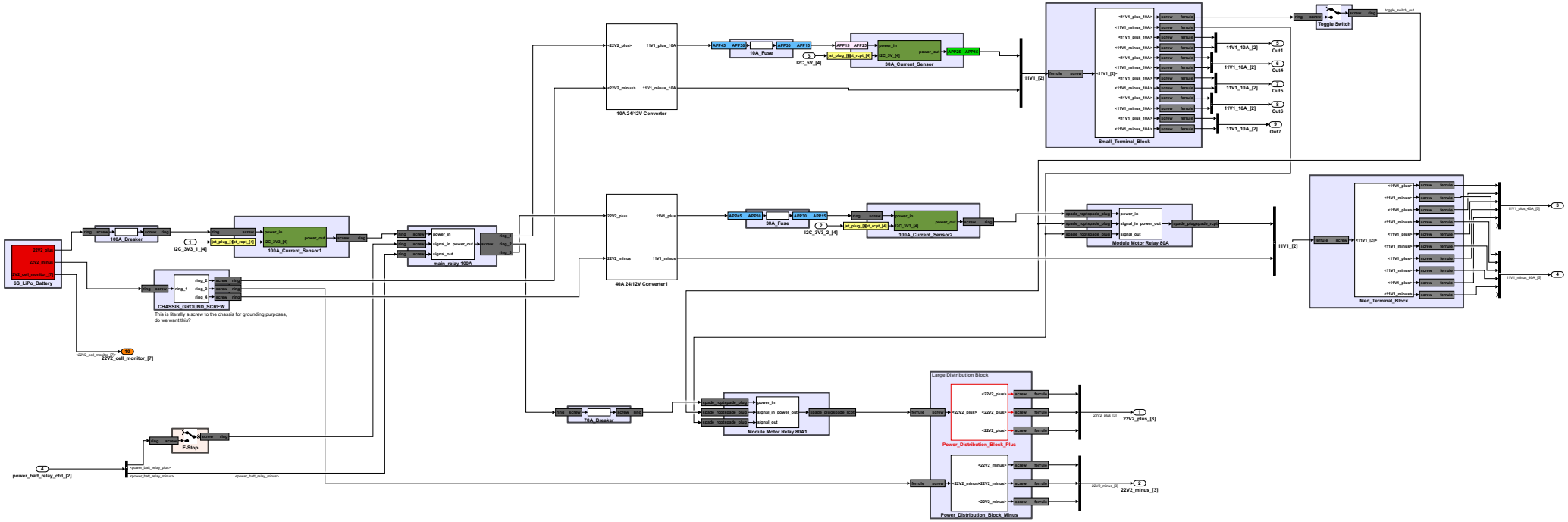
6S_LiPo_Battery
100A_Breaker
I2C_3V3_1_[4]
100A_Current_Sensor1
main_relay_100A
CHASSIS_GROUND_SCREW
This is literally a screw to the chassis for grounding purposes, do we want this?
22V2_cell_monitor_[7]
E-Stop
power_batt_relay_ctrl_[2]
10A 24/12V Converter
10A_Fuse
I2C_5V_[4]
30A_Current_Sensor
11V1_[2]
Small_Terminal_Block
11V1_10A_[2]
Out1
Out4
Out5
Out6
Out7
Toggle Switch
toggle_switch_out
40A 24/12V Converter1
30A_Fuse
I2C_3V3_2_[4]
100A_Current_Sensor2
Module Motor Relay 80A
Med_Terminal_Block
11V1_plus_40A_[5]
11V1_minus_40A_[5]
70A_Breaker
Module Motor Relay 80A1
Large Distribution Block
Power_Distribution_Block_Plus
Power_Distribution_Block_Minus
22V2_plus_[3]
22V2_minus_[3]